REV.	X-Y	ECN	ITEM REVISED	ITEM BEFORE REV	AUTHORIZED BY	BY DATE		
F1	1-1		MATCHED THE PARTS	SEE PREVIOUS	HERBIE	09/05/06	Q.A. MGR.:	DATE:
							MFG. MGR.:	DATE:
							SALES MGR.:	DATE:
							GEN. MGR.:	DATE:

7

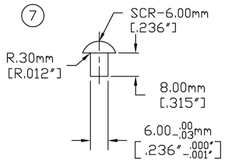

RIVET

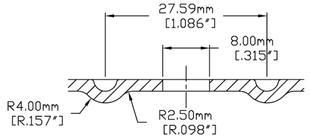

SECTION A-A
SCALE 2:1

1

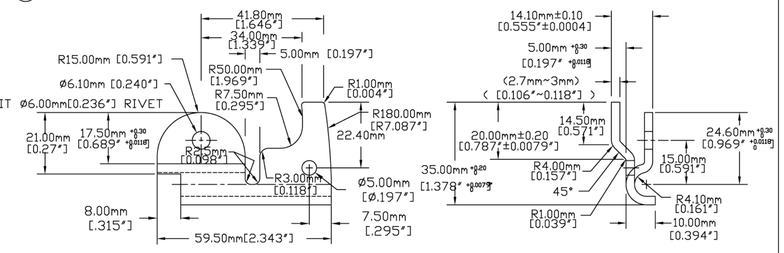

LOCKING LATCH

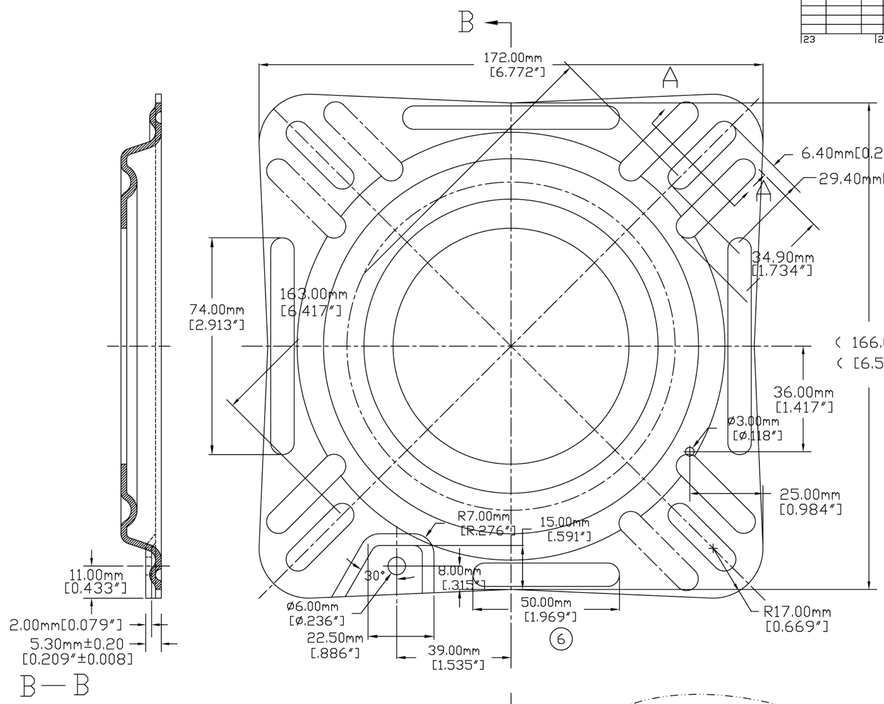

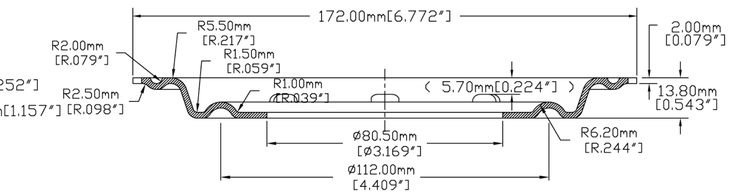

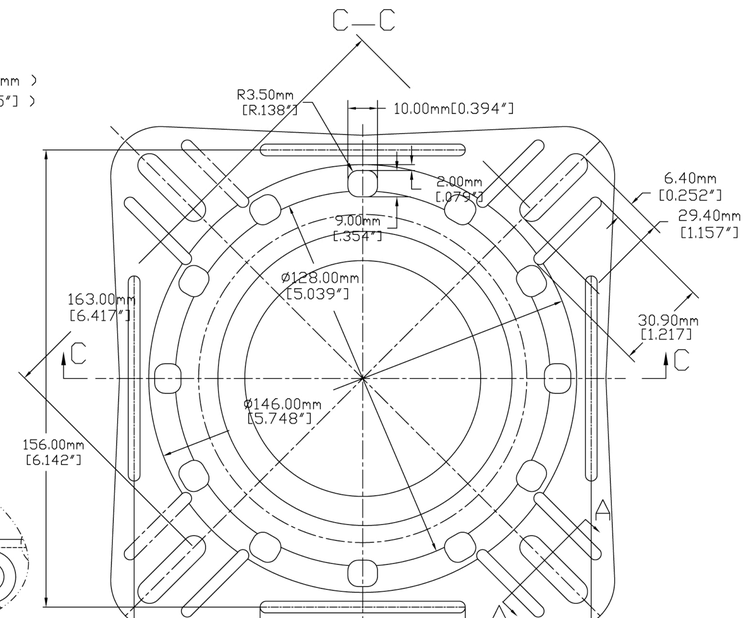

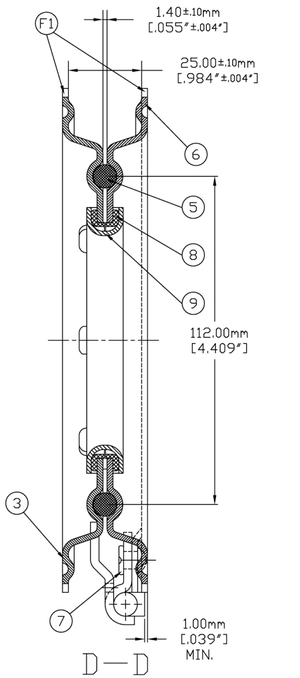

D—D

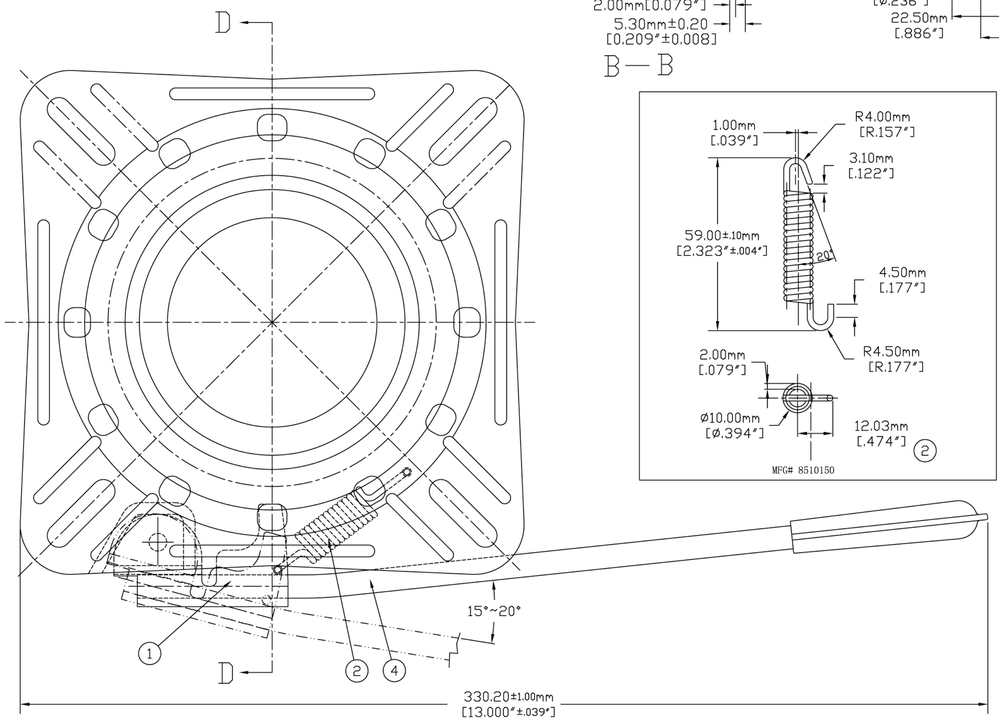

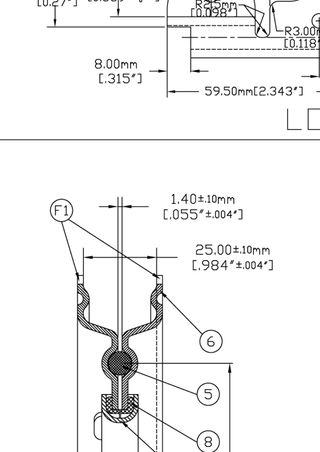

SCALE : 2X
DETAIL "E"

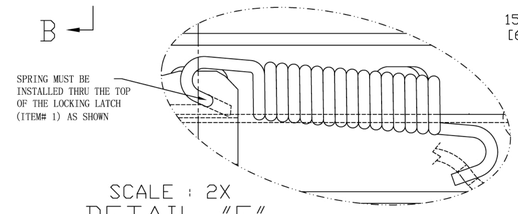

SCALE : 2X
DETAIL "F"

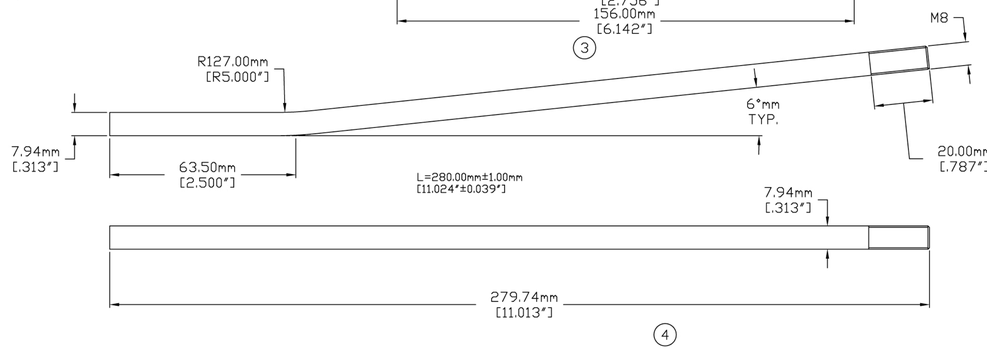

NOTES :
1. CLOCKWISE TEST & COUNTERCLOCKWISE TEST MUST PASS 150 LBS-FT TORSIONAL TESTING

3100019 - STAINLESS STEEL
3100018 - BLACK E COATED